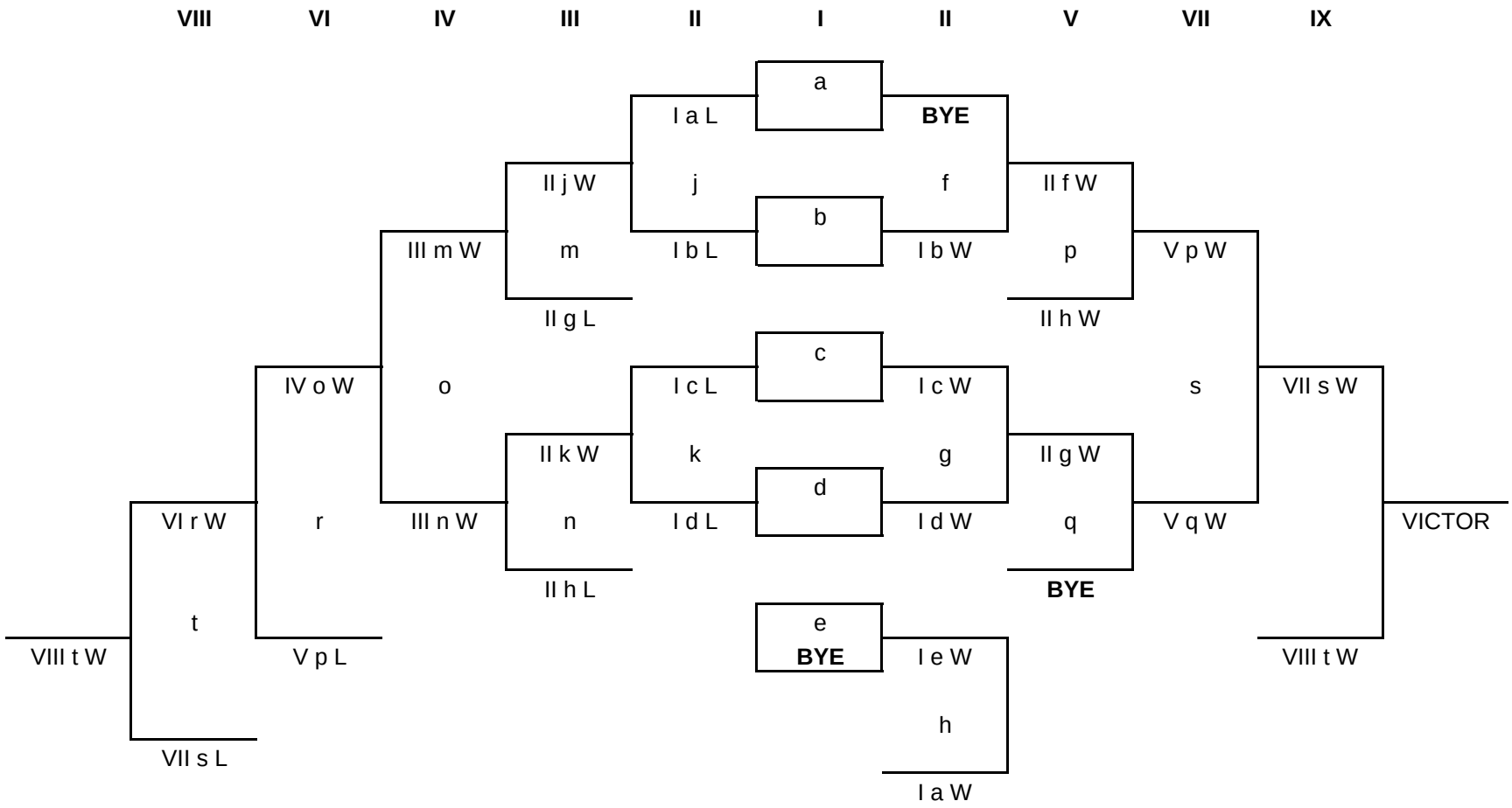Double Elimination - 9 fighters